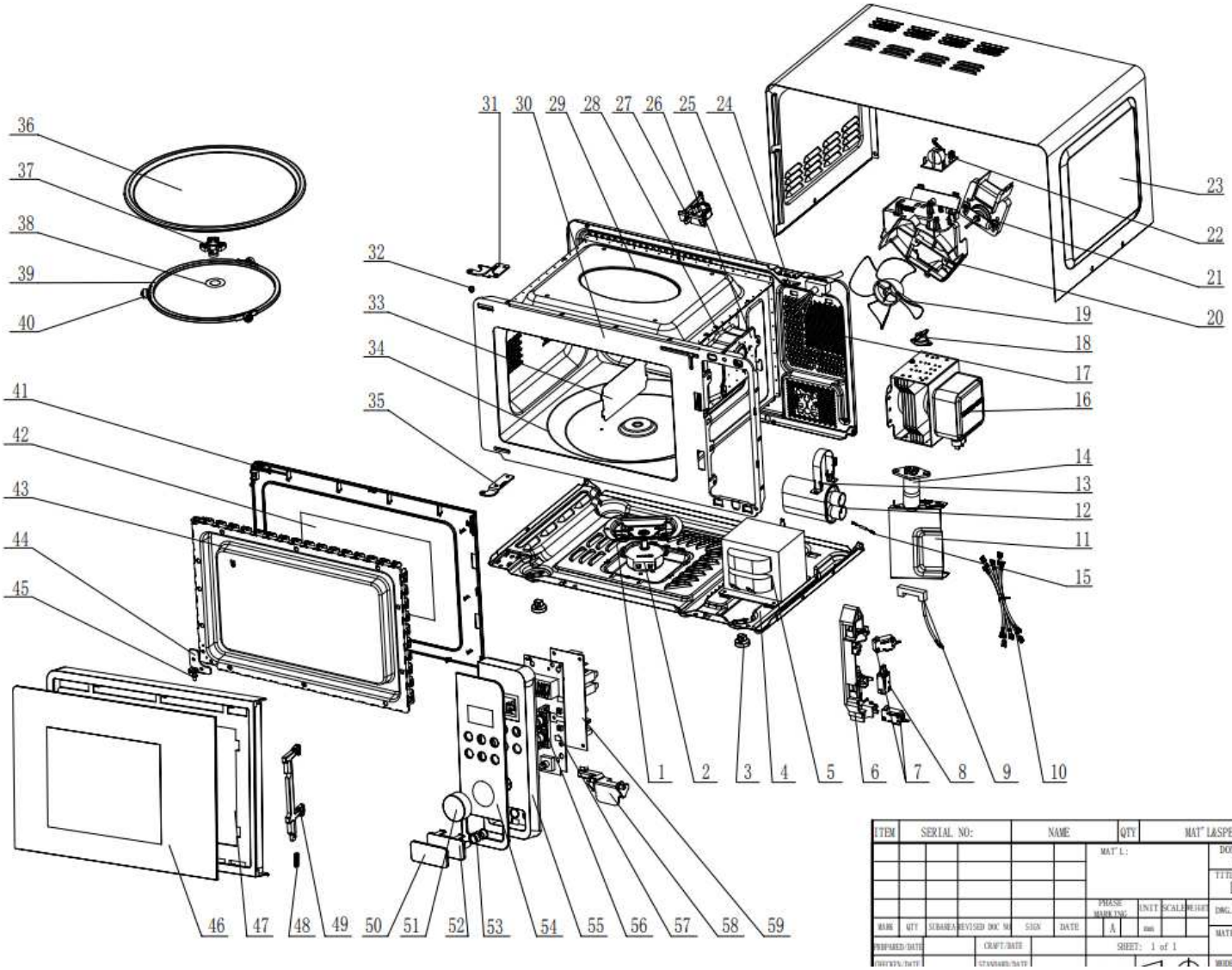
ITEM
SERIAL NO:
NAME
QTY
MAT'L&SPEC
MAT'L:
TITLE:
Expl
DWG. NO:
MATERIAL
SHEET: 1 of 1
MODEL: